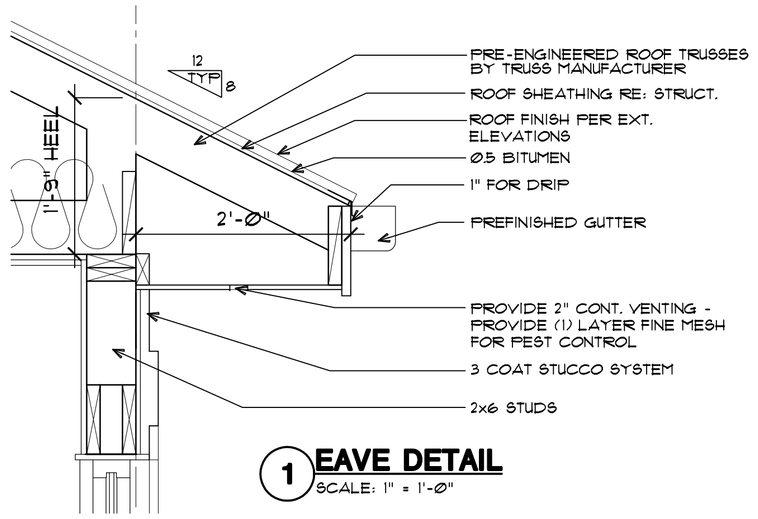

1 EAVE DETAIL
SCALE: 1" = 1'-Ø"

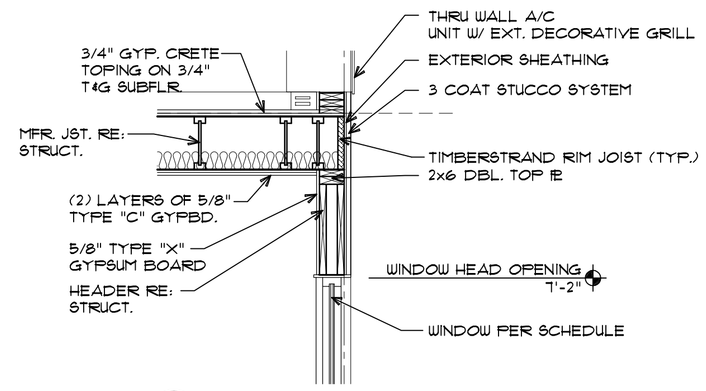

2 HEAD / SILL DETAIL
SCALE: 1/2" = 1'-Ø"

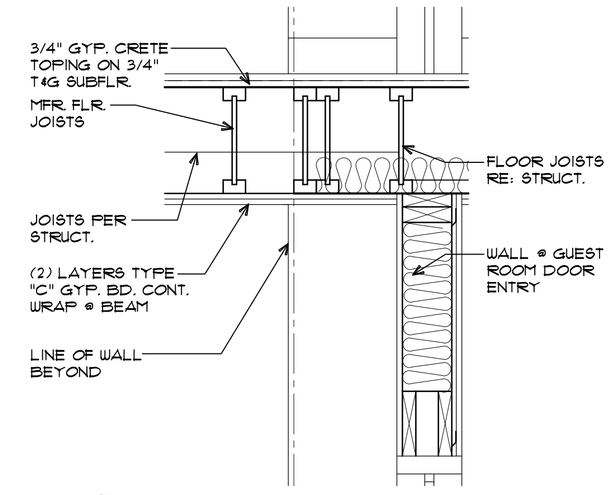

3 1HR WRAP @ CORR. BEAM
SCALE: 1" = 1'-Ø"

1
- FLOOR FINISHED (SEE SCHEDULE)
- TOPPING OPTIONAL
- 4" THICK CONC. SLAB ON GRADE PER STRUCT.
- 4" GRAVEL IF RECOMMENDED BY SOILS ENG.

2
- 3/4" LT. WT GYPCRETE
- 3/4" PLYWOOD DECK
- MFR. FLR. JTS
- R11 SOUND BATT INSULATION
- 2 LAYER OF 5/8" TYP. "C" GYP. BOARD
- SUSP. ACCUS. CLG. TILES CLASS II SMOKE SPREAD RATING (SEE BLDG SECTIONS FOR LOCATION)

3
- 3/4" LT. WT GYPCRETE
- 3/4" PLYWOOD DECK
- MFR. FLR. JTS
- R11 SOUND BATT INSULATION
- 2 LAYER OF 5/8" TYP. "C" GYP. BOARD

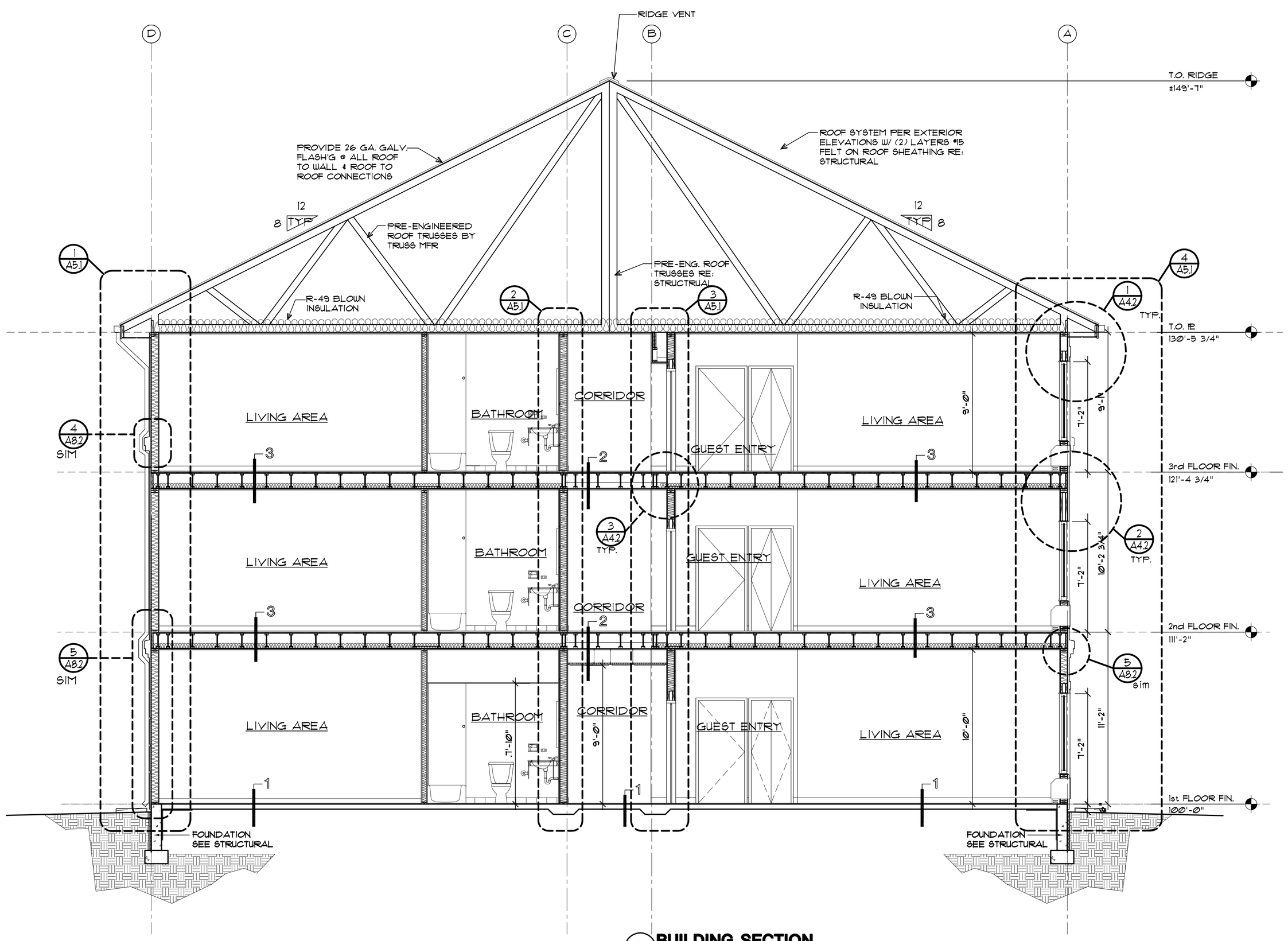

B BUILDING SECTION
SCALE: 1/4" = 1'-Ø"

ASSOCIATED ARCHITECTS
4155 E. JEWELL, SUITE 814
DENVER, COLORADO 80222
PHONE: (303) 691-5353
FAX: (303) 691-5018
Email: ac@associatedarchitects.net

LaQuinta INN & SUITES

A NEW 78 ROOM LA QUINTA FOR:
THE WRIGHT GROUP
North side of 100 North Street
PRICE, UTAH

REVISIONS
1 12/2/08 MDD

CHECKED BY:	DATE:
	10-30-08

DRAWN:	PROJECT NO.:
FZS/ PP	08016

TITLE: BUILDING SECTION

DWG FILE: 8016SECT

SHEET NO.:
A4.2
OF